| UNIT | COOLING TOWER | | | DWG. # | T4284848-DRA-ST | REV. | - |
|---|---|---|---|---|---|---|---|
| MODEL # | AT 428-4O48 | SCALE | NTS | SERIAL # | | DATE | 9/20/2024 |

# EVAPCO, INC.

NOTES:
1. (M)- FAN MOTOR LOCATION
2. HEAVIEST SECTION IS UPPER SECTION
3. MPT DENOTES MALE PIPE THREAD
   FPT DENOTES FEMALE PIPE THREAD
   BFW DENOTES BEVELED FOR WELDING
   GVD DENOTES GROOVED
   FLG DENOTES FLANGE
   PE DENOTES PLAIN END
4. +UNIT WEIGHT DOES NOT INCLUDE ACCESSORIES (SEE ACCESSORY DRAWINGS)
5. MAKE-UP WATER PRESSURE 20 psi MIN [137 kPa], 50 psi MAX [344 kPa]
6. 3/4" [19MM] DIA. MOUNTING HOLES. REFER TO RECOMENDED STEEL SUPPORT DRAWING.
7. DIMENSIONS LISTED AS FOLLOWS:
   ENGLISH FT-IN
   [METRIC] MM
8. PAN FLUME BOX EQUALIZERS SUPPLIED BY EVAPCO. PAN EQUALIZER PIPING IS SUPPLIED BY OTHERS.
9. PAN EQUALIZER NIPPLE IS 11'-10 3/8" [3616] OFF EACH STEP SIDE.

Preliminary

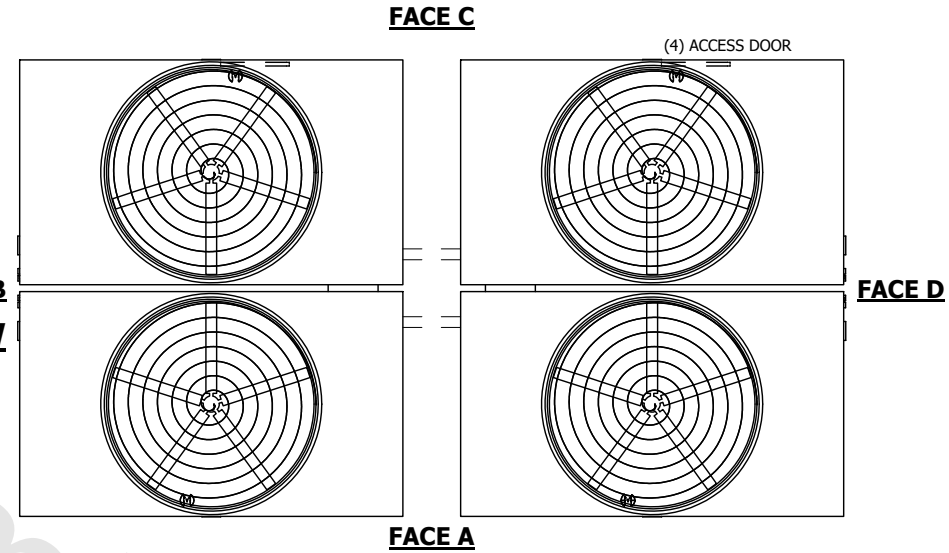


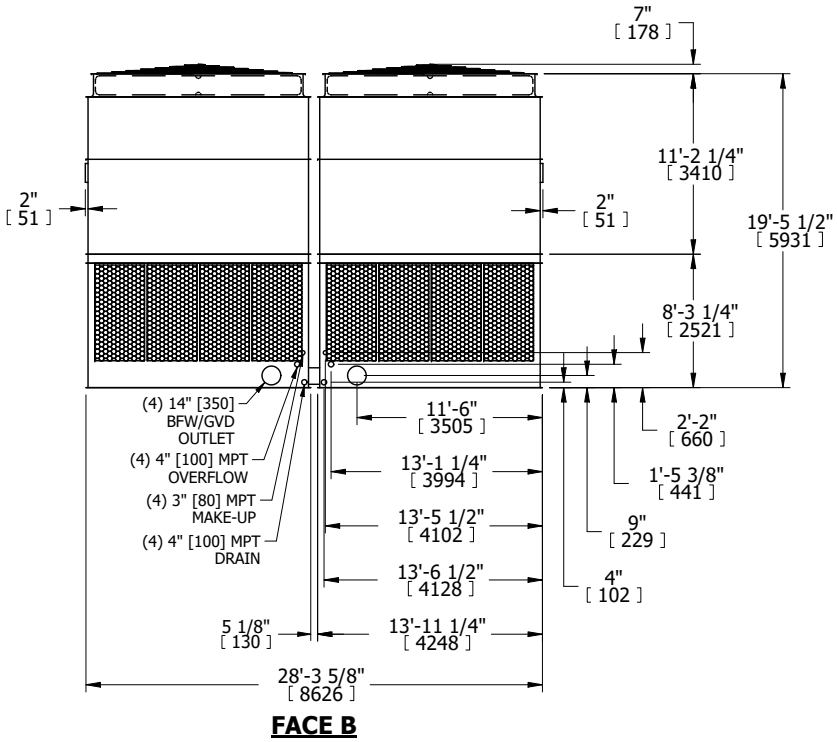


**FACE B**

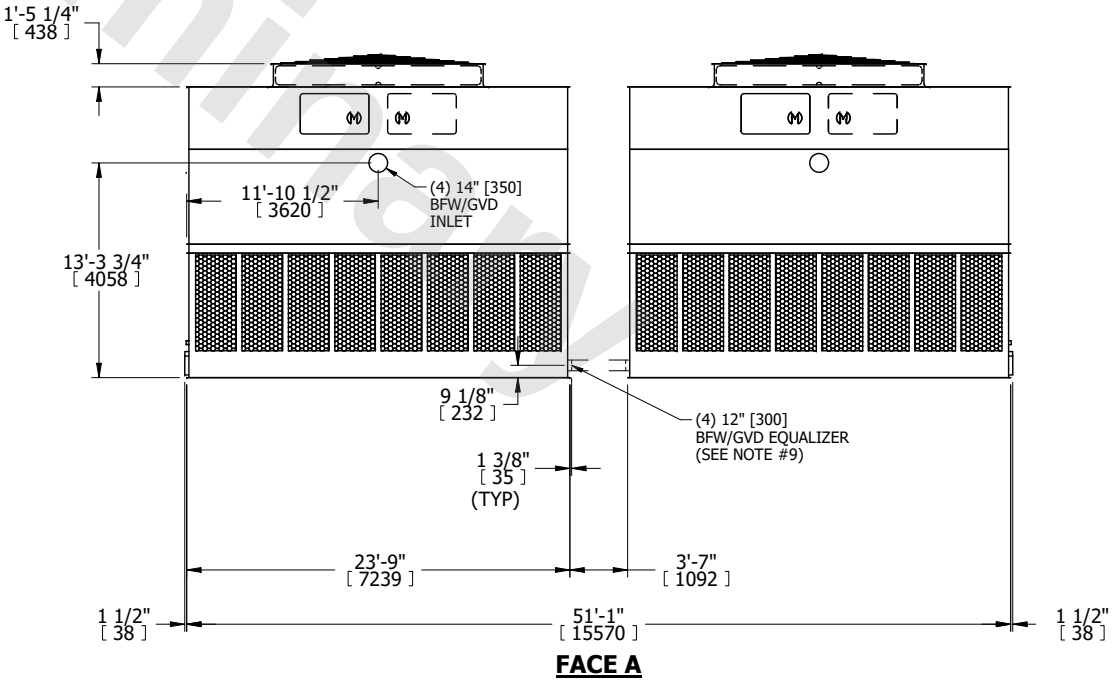


**FACE A**

| SHIPPING WEIGHT | 75880 lbs+ [34420] kg+ | OPERATING WEIGHT | 140560 lbs+ [63760] kg+ | HEAVIEST SECTION WEIGHT | 13250 lbs+ [6015] kg+ | NO. OF SHIPPING SECTIONS | 8 | DRAWN BY: | MER |
|---|---|---|---|---|---|---|---|---|---|